Wright Stander Model B Installation Kit Striper Kit - 98460074
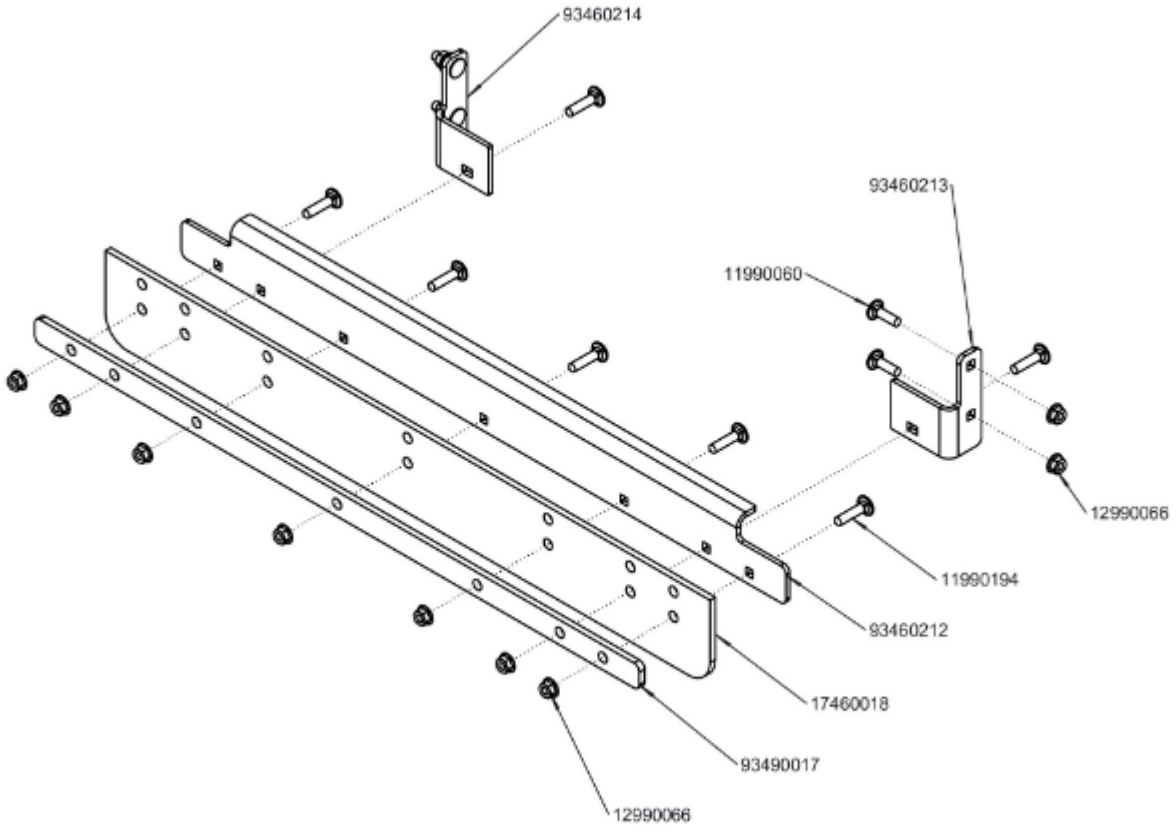
Assemble kit as shown. Once assembled attach to rear of deck.